ATLANTECH LUX AND LUX ONE BOX

INSTALLATION MANUAL

WWW.ATLANTECH.IT

Thank you for choosing one of our products. To install this foundation device correctly and safely, please read this manual carefully. The manual is divided into sections giving you a step-by-step guide to installation.

STEP 1

ACTIVITY:

- Realization of the hole or the excavation, to housing the upper box of the Atlantech Lux foundation, to run in the first case by hydraulic auger and bits, in the second by excavator bucket.
The depth of the hole or of the excavation must be equal to the height of the box, so that the bottom of the box rests on the bottom of the pre-drilled hole / excavation. On rock the pre-holes are drilled using rotary drilling equipment

MEANS AND ACCESSORIES:

- Excavator, we recommend starting from 1,500 kg

- Hydraulic auger, we recommend with max torque starting from 1.3-1.5 KNm

- Auger bits to be hooked to the hydraulic auger with a diameter suitable for housing the box of the foundation Atlantech Lux.
The tip must be chosen depending on the type of soil (agricultural, mixed, rocks / road massifs)

- Excavator bucket

STEP 2

ACTIVITY:

- Positioning and infixing of the Atlantech Lux foundation into the pre-drilling or excavation work carried out in section 1. The screwing is made through the use of an Atlantech installation plate hooked to the auger and up to the design / zero level at complete support of the box on the bottom of the hole / excavation.
- Once the screwing is complete, the installation plate is removed and the foundation is immediately available for the insertion of the corrugated and for the installation of the lighting pole.

MEANS AND ACCESSORIES:

- Excavator, we recommend starting from 1,500 kg

- Hydraulic auger, we recommend with max torque starting from 1.3-1.5 KNm

- Atlantech Lux or ONE-BOX installer. The installer can be adapted to the auger by coupling (nuts/bolts) with a "female" counterplate.

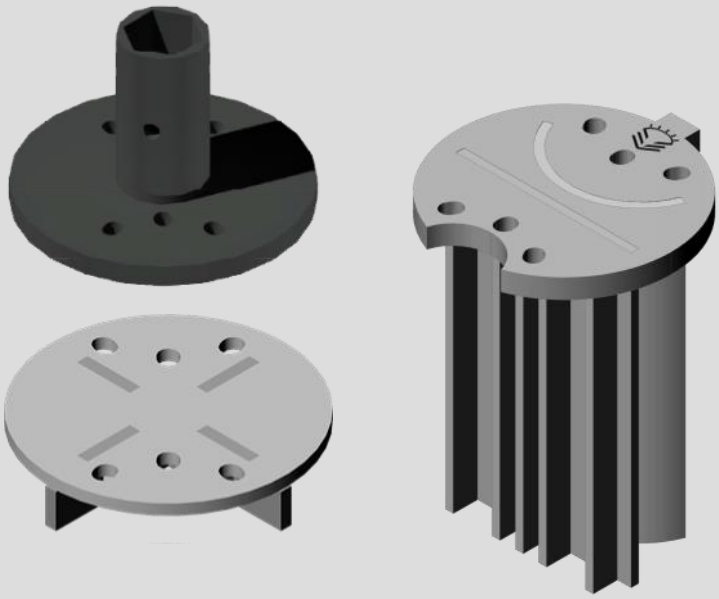

SECTION 3

ACTIVITY:

- ONLY FOR LUX MODELS: Installation of the cast iron frame of the manhole cover on the Atlantech Lux box with the possibility of fixing it using nuts and bolts.
- Insertion of the corrugated into the appropriate side holes and complete re-filling of the corrugated track and any empty spaces left around the box.
- ONLY FOR LUX MODELS: fixing the grounding bolt in the appropriate hole positioned in the center of the internal calendered sheet.

If the lighting pole is not earthed, the connection is not carried out.

MEANS AND ACCESSORIES:

- ONLY FOR LUX MODELS: Atlantech Lux cast iron frame

- Nuts and bolts M8

SECTION 4

ACTIVITY:

- ONLY FOR LUX MODELS: installation of the lighting pole inside the foundation with the passage of a corrugated piece between the pole slot and the internal hole of the box.
- ONLY FOR THE LUX ONE-BOX MODELS: installation of the lighting pole inside the box, with the passage of a corrugated piece between the slot of the pole and the hole positioned on the sides of the box.
- Leveling with use of crushed stone / sand and final seal (5 / 10cm) with mortar or hardening resins.
- Realization of traditional electrical connections.
- ONLY FOR LUX MODELS: closure of the box with a special spheroidal cast iron cover.

MEANS AND ACCESSORIES:

- Suitable means for the installation of the lighting pole
- Crushed stone or sand
- Atlantech Lux cast iron manhole cover ca-

TECHNICAL NOTES FOR INSTALLERS

- The Atlantech box must, under all circumstances, be buried for at least half of its height (for example in the ATLUX Heavy, Medium and Small Plus models the height of the upper box is 80cm, the buried part must be at least 40cm).

- Any voids present around the box at the end of the installation must be filled, depending on their size, using landfill material, or sand, or well-compacted crushed stone, or hydraulic lime, in order to guarantee optimal adhesion of the ground to the foundation.

- In the case of difficulty in drilling into soils with presence of aggregates / pebbles or rocks, a pre-drilled hole using a 10 cm diameter widia tip must be made also for the screw foundation part.

- For the SAVE passive safety range, according to the UNI EN 12767 standard, if the foundation is installed on cemented / asphalted / rocky surfaces, it will be necessary to proceed with a pre-drilled hole, in order to leave a space of at least 10cm all around the Atlantech Lux box. After the foundation's infixing, the remaining space must be filled using mixed sands and for the 30% crushed demolition (7cm sieve), and levelled.

CONTROL AND MAINTENANCE

The maintenance activities aimed at the Atlantech Lux screw foundations, fixed in the ground, can be traced back to the control of the general state, i.e. the restoration of the anti-corrosion protections, the verification of the presence of any lacerations or structural failures, such as misalignments of the foundation, which could require restoration, to be carried out by removal and re-installation or by replacement in case of wear or damage.

INDUSTRIAL PROPERTY

The Atlantech Lux foundations are protected by proprietary know-how, through patents referable to international patents WO/2013/102889 - EP/2800835.

Atlantech S.r.l.

Viale del Lavoro, 8

37060 Bonferraro di Sorgà (VR)

Website: www.atlantech.it

ATLANTECH